See all 11 Products in Family

TECHSPEC® Filter Adapter M105 x 1.0 from M70 x 0.5 (Female)

Filter Adapter M105 x 1.0 from M70 x 0.5 (Female)

Stock **#89-365** **4 In Stock**

- 1 + **₹4,500**

ADD TO CART

Volume Pricing	
Qty 1+	**₹4,500** each
Need More?	Request Quote

Product Downloads

General

Type:
Lens Accessory

Physical & Mechanical Properties

Iris Option:
Variable

Threading & Mounting

Filter Thread:
M105 x 1.00 (Female)

Front Thread:
M70 x 0.5 (Female)

Regulatory Compliance

Certificate of Conformance:
View

Country of Origin:
China

Imported By:
Edmund Optics India Private Limited

Product Details

- 1.1", C-Mount Lens
- Up to 20 MegaPixels, 1.85µm Pixel Size Sensors
- High Performance (HP), C-Mount Lens for Machine Vision
- 6.5mm to 50mm Focal Length

TECHSPEC® HP Series Fixed Focal Length Lenses are designed for the harsh demands of factory automation (FA) and machine vision (MV) applications. The 6.5mm, 8mm, 12mm, 16mm, 25mm, and 35mm lenses are compatible with 1" and 1.1" sensor formats, while the 50mm lens is compatible with up to 4/3" sensor formats. The f/1.8 and f/2.8 apertures provide increased light throughput and high resolution performance. TECHSPEC® HP Series Fixed Focal Length Lenses are C-Mount and feature a locking focus and iris rings to prevent unwanted adjustments, as well as a front filter thread for integrating standard optical filters. Call for OEM Quantity Pricing.

Edmund Optics has created a family of high performance optical designs (the HP Series family) and developed three customized optomechanical solutions targeted for specific applications. These lens sub-families utilize the same optics as the HP Series lenses providing the same optical performance in a variety of optomechanical solutions to meet your application requirements:

- HP Series: Features locking cam focus and iris adjustment. This is the most adjustable version of these optical designs and is the typical high quality machine vision lens.
- HPi Series: Simplified mechanics featuring fixed apertures with compact housing. Industrial Ruggedization for reduced size, cost, and locked focus.
- HPr Series: All optics glued in place and a locking C-clamp focus ring. Stabilized Ruggedization for reduced pixel shift and improved focus stability.

Technical Information

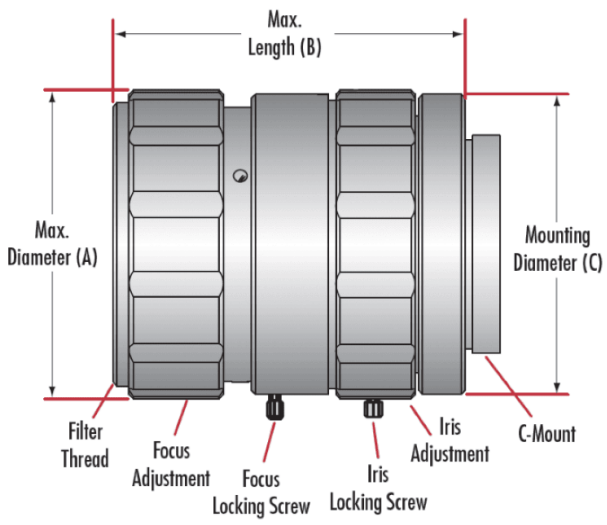

Dimensions				
Focal Length (mm)	A (mm)	B (mm)	C (mm)	Filter Thread
8mm, 1.1" Format	70.4	83.5	43.5	M105 x 1 with required adapter #8
12mm, 1.1 " Format	48	70.1	43.5	M62 x 0.75 with required adapter 236
16mm, 1" Format	48	60.4	57.3 - 59.5	M46 x 0.75
25mm, 1" Format	37.5	45.3	45.3	M34 x 0.5
35mm, 1.1" Format	48.1	65.8	60 - 66	M37 x 0.75
50mm, 4/3" Format	50	72.6	60.5 - 72.6	M37.5 x 0.5

;