C-Mount Camera Adapter

C-Mount Camera Adapter

Stock **#89-860** 10 TO 12 DAYS

- 1 + **₹5,985**

ADD TO CART

Qty 1+

₹5,985

Volume Pricing

Request Quote

Product Downloads

SPECIFICATIONS

General

Note: Camera Mount (One Required)	
Type: Zoom Lens, Modular	

Threading & Mounting

Mount:
C-Mount

Regulatory Compliance

RoHS 2015:
Compliant

Certificate of Conformance:
View

Reach 235:
Compliant

PRODUCT DETAILS

- Wide Range of Magnifications Achievable
- Interchangeable Components Provide Maximum Flexibility
- Motorized and Inline Options Available
- 7X and 12.5X High Precision Zoom Lens Kits Also Available

7X and 12.5X High Precision Zoom Lenses are modular lens systems that consist of a camera mount, camera tube, core module, lower function module, and lower lens. Added versatility is achieved by swapping out modules to change magnification, field of view, or the optical pathway. 7X and 12.5X High Precision Zoom Lenses are compatible with M26 x 36 TPI Mitutoyo-style objectives and with camera sensor coverages and mounts ranging from C-Mount to F-Mount and to 35mm DSLR cameras. 50/50 and 90° cubes are available to introduce right angle turns or to support multiple imaging paths. A motor controller for multi-axis zoom and focus functionality is also available and can be connected to USB, Ethernet, or RS-232/422/285 ports.

A complete zoom lens requires a camera mount, camera tube, zoom module, lower function module, and lower lens. An item selection guide can be found on the Technical Information tab.

TECHNICAL INFORMATION

SPECIFICATIONS													
Lower Lens:		0.4X Lower Lens				1.0X Lower Lens				4.0X Lower Lens			
Working Distance:		490mm				190mm				32mm			
Zoom Modules:		7X Zoom		12.5X Zoom		7X Zoom		12.5X Zoom		7X Zoom		12.5X Zoom	
Max Coax. FOV Dia.:		Not Recommended		Not Recommended		Not Recommended		20mm		9.4mm		9.9mm	
Range:		Low Mag	High Mag	Low Mag	High Mag	Low Mag	High Mag	Low Mag	High Mag	Low Mag	High Mag	Low Mag	High Mag
0.4X Camera Tube	NA	0.0047	0.016	0.0036	0.019	0.012	0.039	0.009	0.048	0.047	0.16	0.036	0.19
	Res (lp/mm)	14	47	11	58	35	116	27	144	142	435	108	576
	PMAG	0.067X	0.46X	0.045X	0.55X	0.17X	1.2X	0.11X	1.4X	0.67X	4.6X	0.45X	5.5X
	DOF (mm)	25	2.4	44	1.5	4.1	0.38	7	0.25	0.25	0.024	0.44	0.015
	Hor. FOV ⅓" (mm)	71	10	107	8.7	29	4.1	43	3.5	7.1	1	11	0.87
	Hor. FOV ½" (mm)	95	14	143	12	38	5.5	57	4.6	10	1.4	14	1.2
	Hor. FOV ⅔" (mm)	131	19	196	16	52	7.6	79	6.4	13	1.9	20	1.6
1.0X Camera Tube	NA	0.0047	0.016	0.0036	0.019	0.012	0.039	0.009	0.048	0.047	0.16	0.036	0.19
	Res (lp/mm)	14	47	11	58	35	116	27	144	142	465	108	576
	PMAG	0.17X	1.2X	0.11X	1.4X	0.42X	2.9X	0.28X	3.5X	1.7X	12X	1.1X	14X
	DOF (mm)	25	2.4	44	1.5	4.1	0.38	7	0.25	0.25	0.024	0.44	0.015
	Hor. FOV ⅓" (mm)	29	4.1	43	3.5	11	1.7	17	1.4	2.9	0.41	4.3	0.35
	Hor. FOV ½" (mm)	38	5.5	57	4.6	15	2.2	23	1.9	3.8	0.55	5.7	0.46
	Hor. FOV ⅔" (mm)	52	7.6	79	6.4	21	3.0	31	2.6	5.2	0.76	7.9	0.64
3.0X Mini Camera Tube	NA	0.0047	0.016	0.0036	0.019	0.012	0.039	0.009	0.048	0.047	0.16	0.036	0.19
	Res (lp/mm)	14	47	11	58	35	116	27	144	142	465	108	576
	PMAG	0.50X	3.5X	0.34X	4.1X	1.3X	8.7X	0.84X	10X	5.0X	35X	3.4X	41X
	DOF (mm)	25	2.4	44	1.5	4.1	0.38	7	0.25	0.25	0.024	0.44	0.015
	Hor. FOV 1" (mm)	25	3.7	38	3.1	10	1.5	15	1.2	2.5	0.37	3.8	0.31
	Hor. FOV ⅘" (mm)	36	5.2	54	4.3	14	2.1	21	1.7	3.6	0.52	5.4	0.43
	Hor. FOV 35mm (mm)	71	10	107	8.7	29	4.1	43	3.5	7.1	1	11	0.87

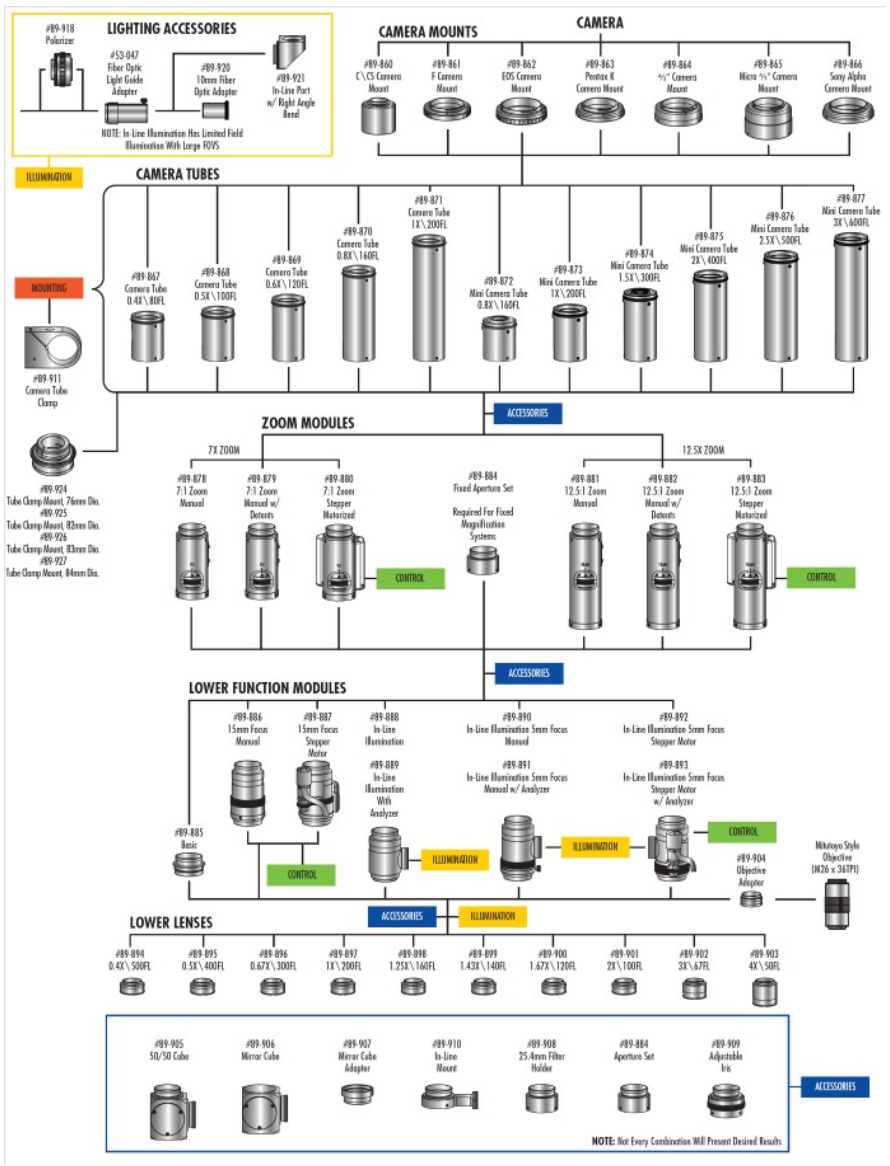

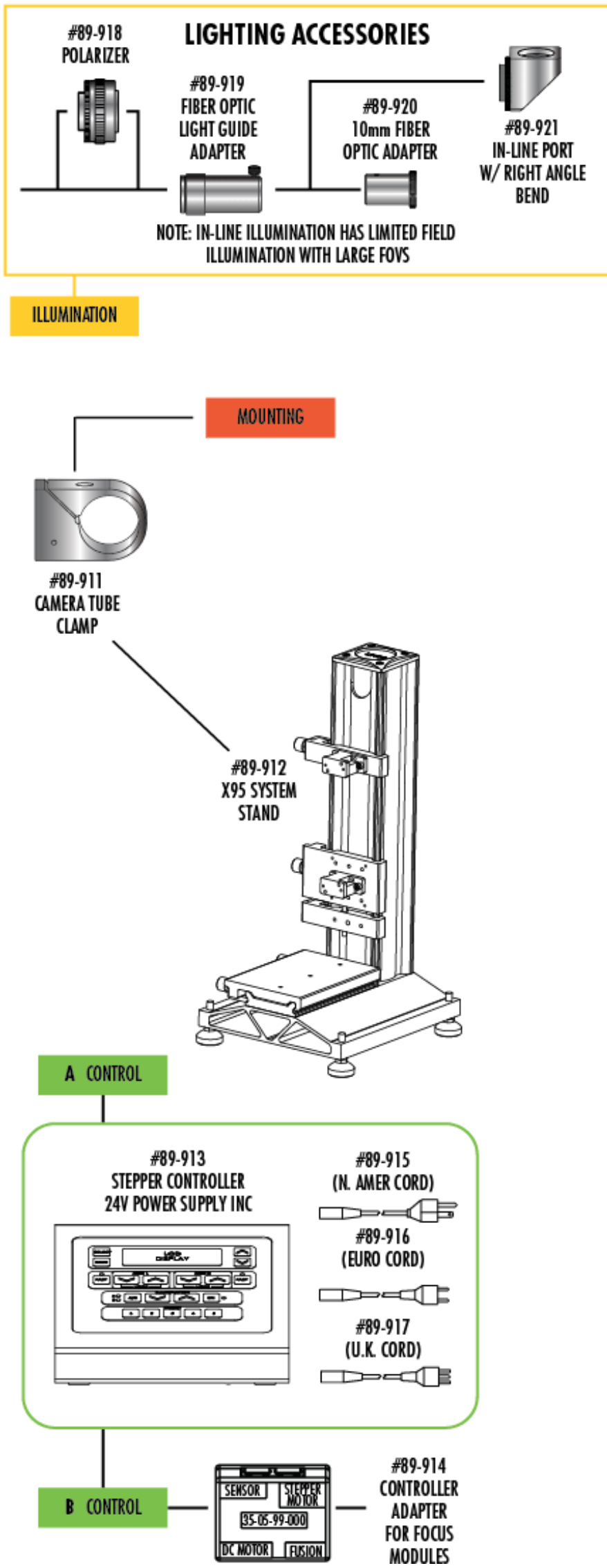
LIGHTING ACCESSORIES
#89-918
POLARIZER
#89-919
FIBER OPTIC
LIGHT GUIDE
ADAPTER
#89-920
10mm FIBER
OPTIC ADAPTER
#89-921
IN-LINE PORT
W/ RIGHT ANGLE
BEND
NOTE: IN-LINE ILLUMINATION HAS LIMITED FIELD
ILLUMINATION WITH LARGE FOVS
ILLUMINATION
MOUNTING
#89-911
CAMERA TUBE
CLAMP
#89-912
X95 SYSTEM
STAND
A CONTROL
#89-913
STEPPER CONTROLLER
24V POWER SUPPLY INC
#89-915
(N. AMER CORD)
#89-916
(EURO CORD)
#89-917
(U.K. CORD)
B CONTROL
SENSOR
STEPPER MOTOR
35-05-99-000
DC MOTOR
FUSION
#89-914
CONTROLLER
ADAPTER
FOR FOCUS
MODULES