See all 9 Products in Family

TECHSPEC® C-Mount Achromat Pair 1:1 with 100 and 100mm Focal Lengths

Stock **#87-192** **1 In Stock**

- 1 + **₹29,972**

ADD TO CART

Volume Pricing	
Qty 1-5	**₹29,972** each
Qty 6-25	**₹23,978** each
Qty 26-49	**₹23,199** each
Need More?	Request Quote

Product Downloads

General

Type:
Relay Lens

Physical & Mechanical Properties

Aperture (mm):
0.8 - 20

Housing Diameter (mm):
38.00

Housing Length (mm):	45.9
Image Distance (mm):	85.00

Optical Properties

Surface Quality:	40-20
Working f/#:	f/5.0 - f/125
Coating:	VIS 0° (425-675nm)
Coating Specification:	R_{avg} ≤0.4% @ 425 - 675nm
Effective Focal Length EFL A (mm):	100.0
Effective Focal Length EFL B (mm):	100.0
Magnification:	1:1
Object Distance (mm):	85.00
Wavelength Range (nm):	425 - 675

Regulatory Compliance

Certificate of Conformance:	View
Country of Origin:	United States
Imported By:	Edmund Optics India Private Limited

Product Details

- C-Mount Designs for Easy Integration into Imaging Applications
- Feature Integrated Iris for Increased Control of Light Throughput
- Ideal for Relay or Projection Applications

TECHSPEC® C-Mount Achromatic Pairs are designed to be easily integrated into a variety of OEM applications. TECHSPEC C-Mount Achromatic Pairs utilize an integrated iris to allow for user adjustment of numerical aperture and depth of focus. Each lens has been oriented for maximum system performance. The aluminum housing removes the risks associated with handling loose optics. Broadband visible coated lenses provide high transmission and low reflection loss over wide spectral regions.

Technical Information

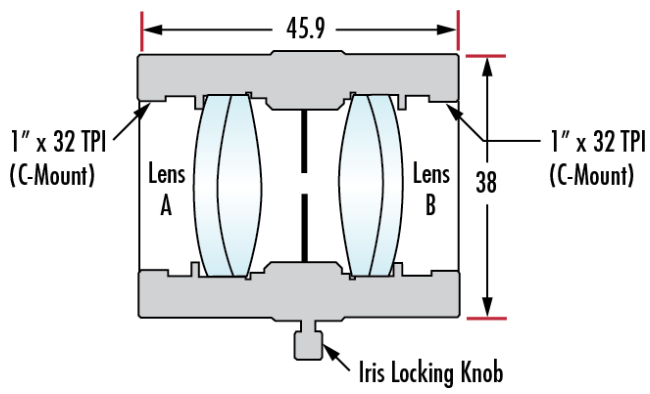

Coating Curves

;