See all 30 Products in Family

20mm Max. Aperture, Burnished Steel Leaves Iris Diaphragm

Standard Series

Stock **#64-508** **14 In Stock**

- 1 + **₹6,491**

ADD TO CART

Volume Pricing	
Qty 1-4	**₹6,491** each
Qty 5-9	**₹5,751** each
Qty 10-25	**₹5,325** each
Need More?	Request Quote

Product Downloads

General

Type:
Unmounted

Physical & Mechanical Properties

Maximum Aperture (mm):
20.0

Outer Diameter (mm):
30.0

Construction:
Anodized Aluminum Alloy, Burnished Spring Steel Leaves

Lever Diameter (mm):
3.00

Lever Length (mm):
13.00

Number of Leaves:
12.00

Thickness (mm):
5.50

Optical Properties

Minimum Aperture (mm):
1.2, Typical

Regulatory Compliance

RoHS 2015:
Compliant

Certificate of Conformance:
View

Reach 247:
Compliant

Country of Origin:
Germany

Importer:
Edmund Optics India Private Limited

Product Details

- Corrosion and High Temperature Resistance Housing
- Anti-Reflective (AR) Spring Steel or Burnished Spring Steel Leaf Options Available
- Mounted Version Features both an English and Metric Tapped Hole for Easy Post Mounting

High Performance Standard Series Iris Diaphragms utilize high-quality materials combined with the highest fabrication standards to guarantee optimum performance and reliability even under extreme environmental conditions. Different leaf and aperture diameter options allow these irises to be successfully integrated into a variety of applications, including imaging and high-temperature environments. Known pin/tab angular deviation allows upfront, accurate assessment of movement requirements. Mounted versions of these diaphragms feature both metric and English tapped holes for easy post mounting. These diaphragms are offered with maximum apertures of 5 – 75mm and that have outer diameters ranging from 10 to 100mm. High Performance Standard Series Iris Diaphragms are constructed of a corrosion-resistant, matte finish, black anodized aluminum alloy.

For specific OEM application assistance, please contact our **Applications Engineering Department.**

Note: **Iris Diaphragm Mounts** sold separately.

Technical Information

Outer Diameter A	Maximum Aperture B	Minimum Aperture C	Thickness D	Level Position E	Full Angular Range of Lever F	Stock No.
10mm	5mm	0.5mm	4mm	2.4mm	76°	#57-573
						#57-578
12mm	7mm	0.5mm	4mm	2.4mm	85°	#57-574
						#57-579
14.8mm	8mm	1mm	4.5mm	2.5mm	81°	#57-580
						#64-507
19.8mm	12mm	1mm	4mm	2.5mm	80°	#57-575
						#57-581
28mm	18mm	1mm	5mm	2.9mm	89°	#57-576
30mm	20mm	1.2mm	5.5mm	2.9mm	90°	#57-577
						#64-508
37mm	25mm	1.5mm	5.5mm	3mm	93°	#57-582
53mm	37mm	2.5mm	6mm	3.2mm	89°	#57-583
70mm	50mm	2.5mm	7mm	3.8mm	84°	#57-584
82mm	60mm	4mm	8mm	4.5mm	91°	#57-585
100mm	75mm	4mm	9mm	4.5mm	95°	#57-586

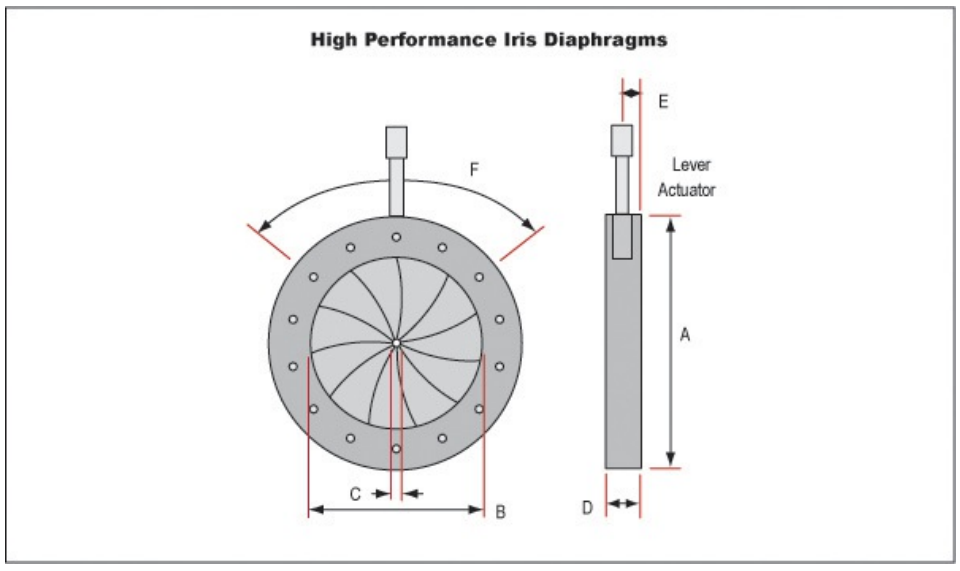
High Performance Iris Diaphragms
E
F
Lever
Actuator
A
C
B
D