See all 15 Products in Family

TECHSPEC® 266nm 2.5X - 8X Research-Grade Variable Beam Expander

266nm 2.5X - 8X Research-Grade Variable Beam Expander, #87-565

Stock **#87-565** **5 In Stock**

- 1 + **₹1,27,563**

ADD TO CART

Volume Pricing	
Qty 1-4	**₹1,27,563** each
Qty 5+	**₹1,12,404** each
Need More?	Request Quote

Product Downloads

General

Type: Beam Expander

Style: Variable Magnification

Physical & Mechanical Properties

Length (mm): 157.40

Weight (g):

483

Housing Diameter (mm):
51

Maximum Input Beam Tilt (mrad):
1

Optical Properties

Entrance Aperture (mm):
15

Exit Aperture (mm):
30

Expansion Power:
2.5X - 8X

Substrate:
Fused Silica (Corning 7980)

Transmission (%):
>95 @ DWL

Angle of Incidence (°):
0 ±0.06

Coating:
Laser V-Coat (266nm, 355nm)

Design Wavelength DWL (nm):
266

Transmitted Wavefront, P-V:
<3/4λ for Input Beam ≤4mm (2.5X-4X)
≤λ/2 for Input Beam ≤2mm (>4X)

Wavelength Range (nm):
260 - 365

Coating Specification:
R_{abs} <0.25% @ 265 - 267nm
R_{abs} <0.25% @ 354 - 356nm
R_{avg} <1.0% @ 260 - 365nm

Damage Threshold, By Design:
2 J/cm^2 @ 10ns, 20 Hz, 266nm

Divergence Adjustment:
Non-Rotating Optics

Damage Threshold, Pulsed:
2 J/cm^2 @ 266nm, 10ns, 20Hz

Threading & Mounting

Mounting Threads:
Input: Male C-Thread (1" x 32 TPI)
Output: Male T-Thread (M42 x 0.75)

Regulatory Compliance

RoHS 2015:
Compliant

Certificate of Conformance:
View

Reach 247:
Compliant

Country of Origin:
United States

Imported By:
Edmund Optics India Private Limited

Need different specs or modifications?

Edmund Optics offers comprehensive custom manufacturing services for optical and imaging components tailored to your specific application requirements. Whether in the prototyping phase or preparing for full-scale production, we provide flexible solutions to meet your needs. Our experienced engineers are here to assist—from concept to completion.

Our capabilities include:

- Custom dimensions, materials, coatings, and more
- High-precision surface quality and flatness
- Tight tolerances and complex geometries
- Scalable production—from prototype to volume

Learn more about our custom manufacturing capabilities or submit an inquiry here.

Product Details

- 1X – 3X and 2X – 8X Variable Magnification
- Non-Rotating Lenses Minimize Beam Wander
- Compact Galilean Designs with Fixed Housing Length
- TECHSPEC® Draconis® Broadband Beam Expanders Also Available

TECHSPEC® Research-Grade Variable Beam Expanders (RVBX) are ideal for high power laser applications where magnification changes may be required, such as prototyping or R&D. TECHSPEC Research-Grade Variable Beam Expanders feature λ/4 transmitted wavefront, Galilean designs, and high laser damage threshold AR coatings to ensure maximum transmittance while minimizing ghost reflections. Additionally, these beam expanders use internal translation and focusing mechanisms to variable adjust magnification and laser divergence without affecting overall housing length. This compact design removes the need to make system accommodations for changes in length

and eases system integration.

TECHSPEC Research-Grade Variable Beam Expanders can be used to determine a system's required beam magnification in the prototyping phase of development. **TECHSPEC® Draconis® Broadband Beam Expanders** are available for production or OEM implementation. Please contact our **Sales Department** for custom magnification requirements.

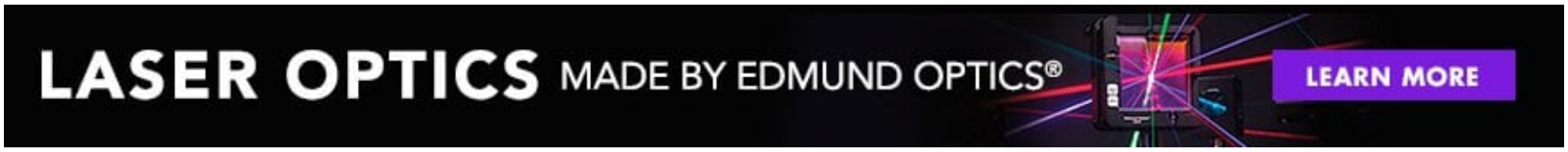

Technical Information

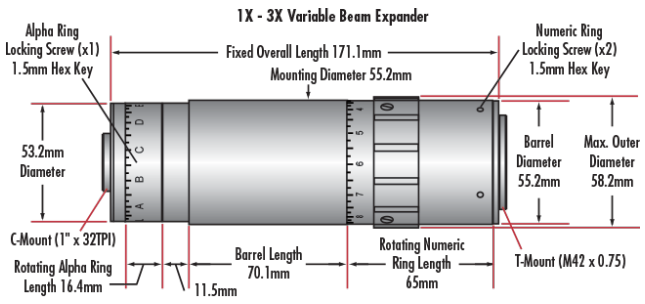

Design Wavelength	Stock No.	Fixed Overall Length A (mm)	Mounting Length E (mm)	Rotating Numeric Ring Length F (mm)	Rotating Alpha Ring Length G (mm)
355nm	#87-566	169.7	35.9	90.7	19.4
532nm	#87-567	169.3	31.5	70.4	43.7
Broadband VIS (633nm)	#87-569	169.3	31.5	70.4	43.7
Broadband NIR (785nm)	#87-570	169.3	31.5	70.4	43.7
1064nm	#87-568	169.3	31.5	70.4	43.7

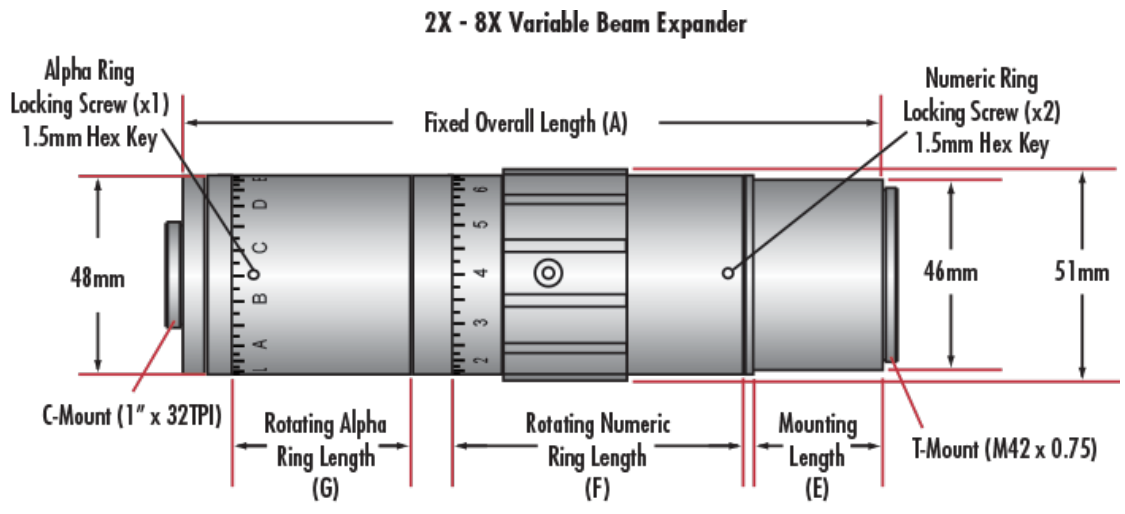

;