See all 27 Products in Family

TECHSPEC® 25mm Dia. x 30mm FL, BBAR (1650-3000nm) Coated, Si Plano-Convex Lens

Stock **#21-089** **4 In Stock**

Other Coating Options

- 1 + **MRP ₹26,837**

Price inclusive of all taxes

ADD TO CART

Volume Pricing	
Qty 1-5	**₹26,837** each
Qty 6-25	**₹22,903** each
Qty 26-49	**₹20,279** each
Need More?	Request Quote

Product Downloads

General

Type:
Plano-Convex Lens

Physical & Mechanical Properties

Diameter (mm):
25.00 +0.0/-0.1

Centering (arcmin):

<3

Center Thickness CT (mm):
3.50 ±0.10

Edge Thickness ET (mm):
2.41

Clear Aperture CA (mm):
24

Bevel:
Protective as needed

Optical Properties

Effective Focal Length EFL (mm):
30.00 @ 10.6µm

Back Focal Length BFL (mm):
28.98

Coating:
BBAR (1650-3000nm)

Coating Specification:
R_{avg} <1% @ 1650 - 3000nm
R_{abs} <2% @ 1650 - 3000nm

Substrate:
Silicon (Si)

Surface Quality:
60-40

Power (P-V) @ 632.8nm:
2λ

Irregularity (P-V) @ 632.8nm:
λ/2

Radius R_1 (mm):
72.53

f/#:
1.2

Numerical Aperture NA:
0.42

Wavelength Range (nm):
1650 - 3000

Regulatory Compliance

RoHS 2015:
Compliant

Certificate of Conformance:
View

Reach 235:
Compliant

Country of Origin:
Singapore

Imported By:
Edmund Optics India Private Limited
267, Greystone Building, Second Floor,
6th Cross Rd, Binnamangala,
Stage 1, Indiranagar, Bengaluru,
Karnataka, India 560038
Phone: +91- 80-6845 0000

Need different specs or modifications?

Edmund Optics offers comprehensive custom manufacturing services for optical and imaging components tailored to your specific application requirements. Whether in the prototyping phase or preparing for full-scale production, we provide flexible solutions to meet your needs. Our experienced engineers are here to assist—from concept to completion.

Our capabilities include:

- Custom dimensions, materials, coatings, and more
- High-precision surface quality and flatness
- Tight tolerances and complex geometries
- Scalable production—from prototype to volume

Learn more about our custom manufacturing capabilities or submit an inquiry here.

Product Details

- Wavelength Range of 1.2 - 7µm
- Low Density and Dispersion
- Focal Lengths of 25 – 250mm Available
- Additional Infrared Lenses Available in Popular Substrates

Our TECHSPEC® Silicon Plano-Convex (PCX) Lenses feature precision polished surfaces, making them ideal for a variety of infrared applications, including Near-Infrared (NIR) imaging, and infrared spectroscopy. Available in a variety of focal lengths from f/1 thru f/10, the lenses are offered uncoated or broadband anti-reflection coated. For more information on Silicon properties, please review our guide to selecting The Correct Material for Infrared (IR) Applications.

Technical Information

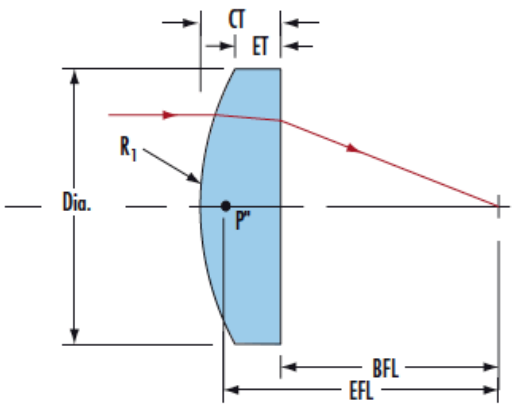

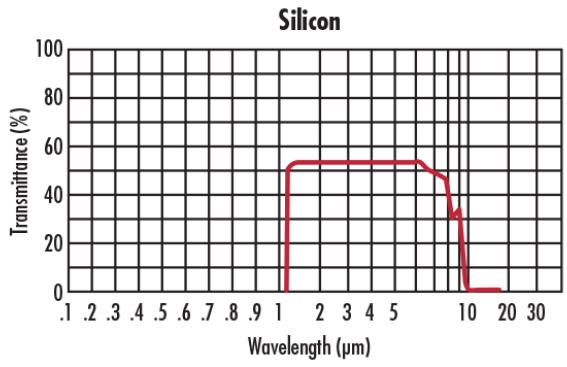

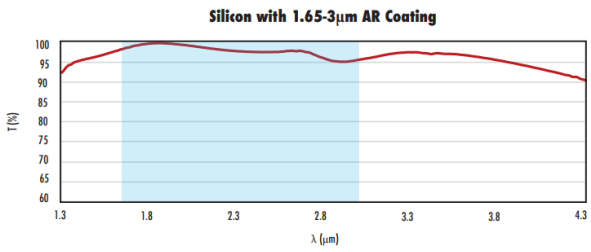

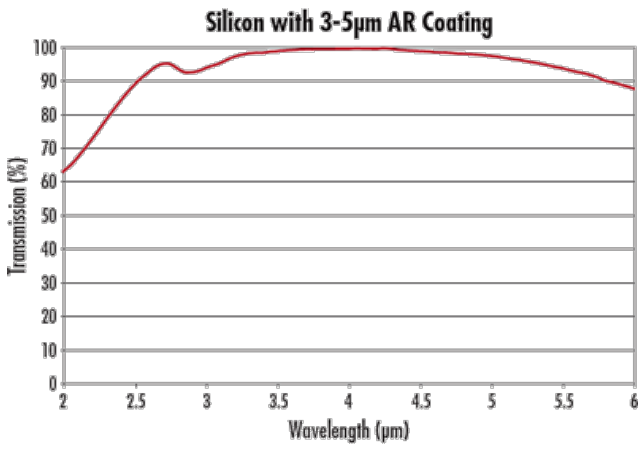

Compatible Mounts

;