NOTES:

1. SUBSTRATE:
   Zinc Selenide (ZnSe), CVD Grade

2. CENTERING TOLERANCE:
   <3 ARCMIN

3. COATING (APPLY ACROSS CLEAR APERTURE)
   S1 & S2: NONE

4. FINE GRIND SURFACE

5. FOCAL LENGTH TOLERANCE: ±2%

6. ROHS COMPLIANT

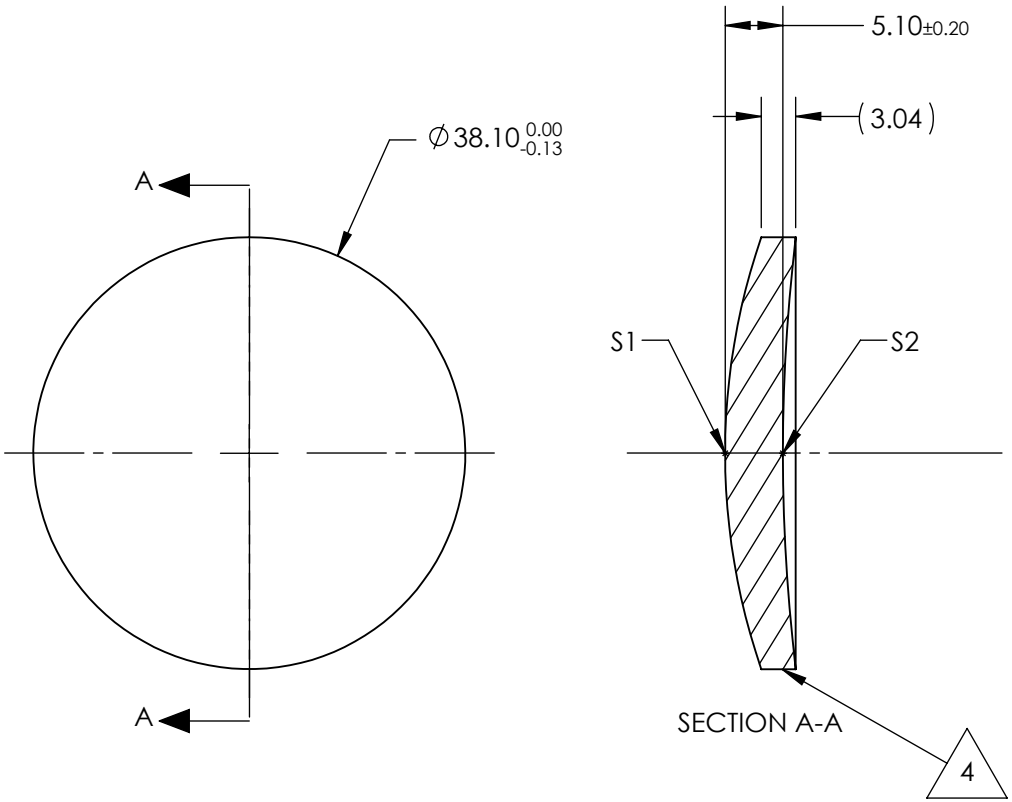

FOR INFORMATION ONLY:
DO NOT MANUFACTURE PARTS TO THIS DRAWING

	S1	S2
SHAPE	CONVEX	CONCAVE
RADIUS	58.49	161.08
IRREGULARITY AT 10.6µm	λ/20	λ/20
SURFACE QUALITY	60-40	60-40
CLEAR APERTURE	ø34.29	ø34.29
BEVEL	PROTECTED AS NEEDED	PROTECTED AS NEEDED

EFL @ 10.6µm	63.5
BFL @ 10.6µm	60.39

SPECIFICATIONS SUBJECT TO CHANGE WITHOUT NOTICE
DIMENSIONS ARE FOR REFERENCE ONLY

Edmund Optics®

THIRD ANGLE PROJECTION		TITLE	38.1mm Dia. x 63.5mm FL, Uncoated, ISP Optics Zinc Selenide (ZnSe) Meniscus Lens	
ALL DIMS IN	mm	DWG NO	24920	SHEET 1 OF 1