NOTES:

1. SUBSTRATE: N-SF6

2. COATING (APPLY ACROSS CLEAR APERTURE)

   S1 & S2: NIR+ (600-1050nm)

   R(AVG) <0.5% @ 600 - 1050nm @ ±30° AOI
   R(ABS) <1.5% @ 600 - 1050nm @ ±30° AOI

3. EDGES: FINE GROUND

4. CENTERING: < 1 ARCMIN

5. ASPHERE FIGURE ERROR: 0.25µm RMS

6. ASPHERIC SURFACE DESCRIBED BY (REF. COEFFICIENT TABLE)

$$Z_{ASPH}(Y) = \frac{(1/RADIUS) * Y^2}{1 + \sqrt{1 - (1+k) * (1/RADIUS)^2 * Y^2}} + D*Y^2 + E*Y^4 + F*Y^6 + G*Y^8 + H*Y^{10} + J*Y^{12} + L*Y^{14}$$

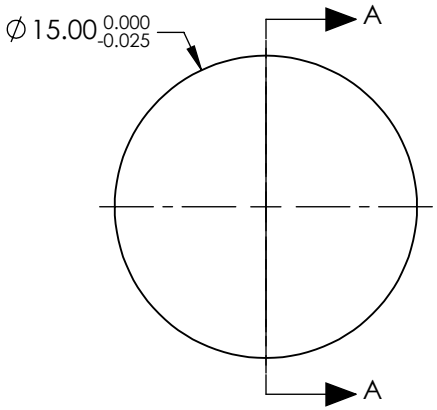

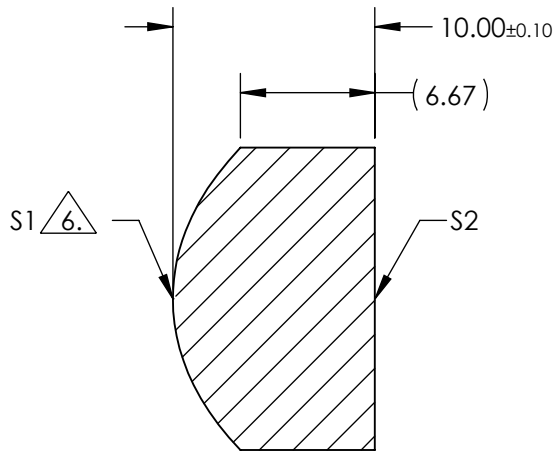

SECTION A-A

COEFFIECIENT TABLE 6.	
COEFFIECIENT	**S1**
SEMI-DIAMETER	7.500000E+00
(1/RADIUS)	1.103875E-01
k	-8.308645E-01
D	0.000000E+00
E	4.977037E-05
F	2.915007E-08
G	-3.112502E-10
H	-1.719935E-11
J	6.934543E-14
L	0.000000E+00

FOR INFORMATION ONLY:
DO NOT MANUFACTURE PARTS TO THIS DRAWING

SPECIFICATIONS SUBJECT TO CHANGE WITHOUT NOTICE DIMENSIONS ARE FOR REFERENCE ONLY

	S1	S2
SHAPE	CONVEX	PLANO
RADIUS	9.059	INFINITY
SURFACE QUALITY	40-20	40-20
CLEAR APERTURE	Ø13.50	Ø13.50
BEVEL MAX	PROTECTIVE AS NEEDED	PROTECTIVE AS NEEDED

EFL @ 587.6nm	11.25	Edmund Optics®	
BFL @ 587.6nm	5.71		
THIRD ANGLE PROJECTION		TITLE	15mm Dia., 0.66 Numerical Aperture, 600-1050nm Coated, Inked, High Precision Aspheric Lens
ALL DIMS IN	mm	DWG NO	16974INK
			SHEET 1 OF 1