NOTES:

1. SUBSTRATE: N-SF6

2. COATING (APPLY ACROSS CLEAR APERTURE)

   S1: NONE
   S2: NONE

3. EDGES: FINE GROUND

4. CENTERING: < 1 ARCMIN

5. ASPHERE FIGURE ERROR: 0.25µm RMS

6. BLACKENED SURFACE

7. ASPHERIC SURFACE DESCRIBED BY (REF. COEFFICIENT TABLE)

$$Z_{ASPH}(Y) = \frac{(1/RADIUS) * Y^2}{1+\sqrt{1-(1+k)*(1/RADIUS)^2 * Y^2}} + D*Y^2 + E*Y^4 + F*Y^6 + G*Y^8 + H*Y^{10} + J*Y^{12} + L*Y^{14}$$

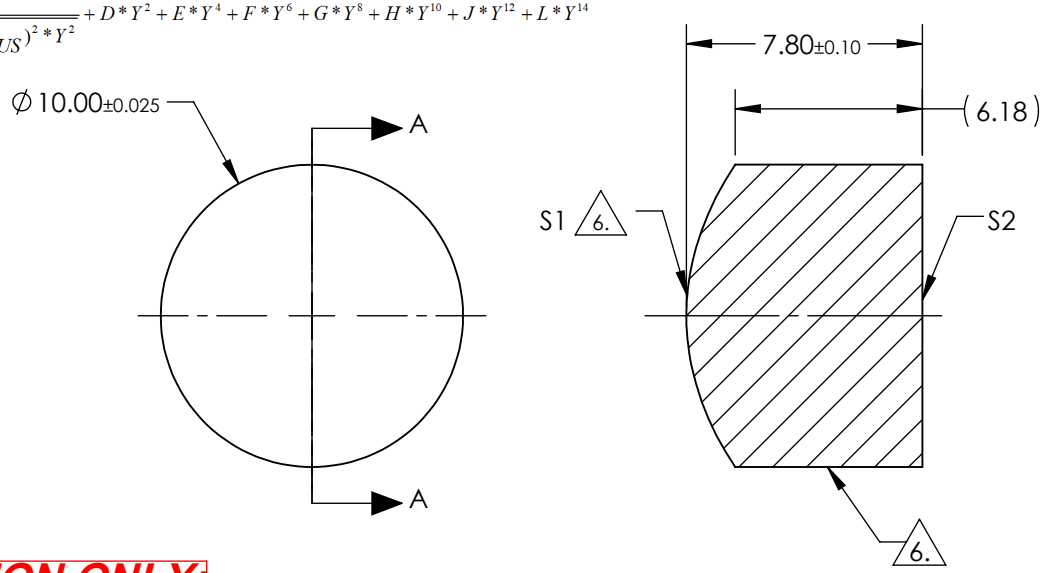

SECTION A-A

COEFFIECIENT TABLE 6.	
COEFFIECIENT	**S1**
SEMI-DIAMETER	5.000000E+00
(1/RADIUS)	1.241927E-01
k	-7.095932E-01
D	0.000000E+00
E	3.400286E-05
F	-2.959410E-08
G	-4.393734E-09
H	0.000000E+00
J	0.000000E+00
L	0.000000E+00

FOR INFORMATION ONLY:
DO NOT MANUFACTURE PARTS TO THIS DRAWING

SPECIFICATIONS SUBJECT TO CHANGE WITHOUT NOTICE DIMENSIONS ARE FOR REFERENCE ONLY

	S1	S2
SHAPE	CONVEX	PLANO
RADIUS	8.052	INFINITY
SURFACE QUALITY	40-20	40-20
CLEAR APERTURE	Ø9.00	Ø9.00
BEVEL MAX	PROTECTIVE AS NEEDED	PROTECTIVE AS NEEDED

EFL @ 587.6nm	10.00	Edmund Optics®	
BFL @ 587.6nm	5.68		
THIRD ANGLE PROJECTION		TITLE	10mm DIA., 0.50 NUMERICAL APERTURE, UNCOATED, INKED, HIGH PRECISION ASPHERIC LENS
ALL DIMS IN	mm	DWG NO	37415INK — SHEET 1 OF 1