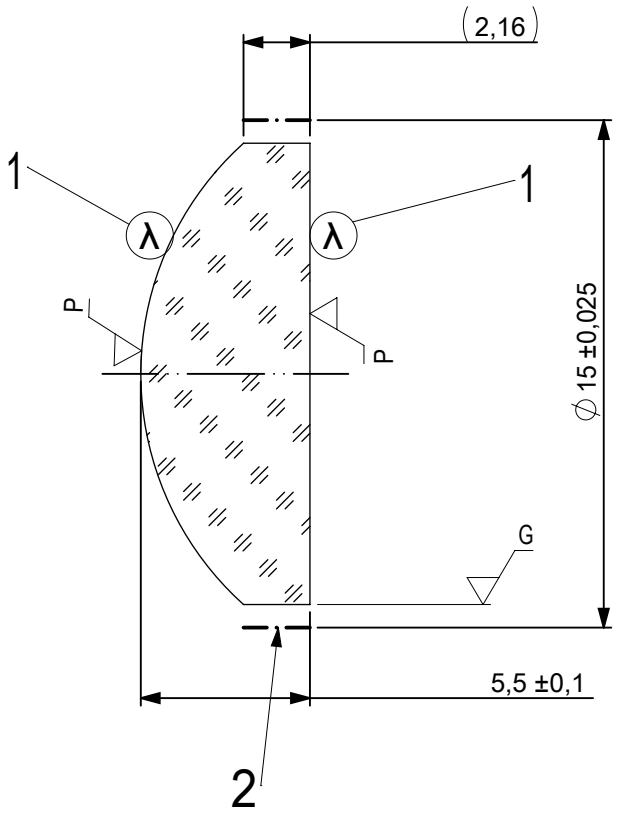

FOCAL LENGTH (EFL): 15 ±0,15

BACK FOCAL LENGTH (BFL): 11,71

1 AR COATING: VIS-EXT
R(AVG) ≤ 0,5% FROM 350-700nm @ 0° AOI

2 BLACKENED SURFACE

LEFT SURFACE	MATERIAL	RIGHT SURFACE
R 10,09±0,01 CX	GLASS N-SF5 673/322	R ∞ PL
Øe 14		Øe 14
3/ 3 (0,5) λ=632,8 nm		3/ 3 (0,5) λ=632,8 nm
4/ -		4/ 1,49'
5/ 40 - 20 (MIL-PRF-13830B)		5/ 40 - 20 (MIL-PRF-13830B)
6/ -		6/ -

PROTECTIVE CHAMFERS AS NEEDED		FIRST ANGLE PROJECTION	Edmund Optics®	
ROHS: COMPLIANT	SCALE: NONE	λ = 587,6nm		
SPECIFICATIONS SUBJECT TO CHANGE WITHOUT NOTICE. DIMENSIONS ARE FOR REFERENCE ONLY			TITLE	15,0mm Dia, x 15,0mm FL, Inked, VIS-EXT Coated Plano-Convex Lens
FOR INFORMATION ONLY: DO NOT MANUFACTURE PARTS TO THIS DRAWING		ALL DIMS IN: mm		
INDICATIONS IN ACCORDANCE WITH ISO 10110			DWG NO 88693INK	SHEET SIZE A4 / SHEET 1 OF 1