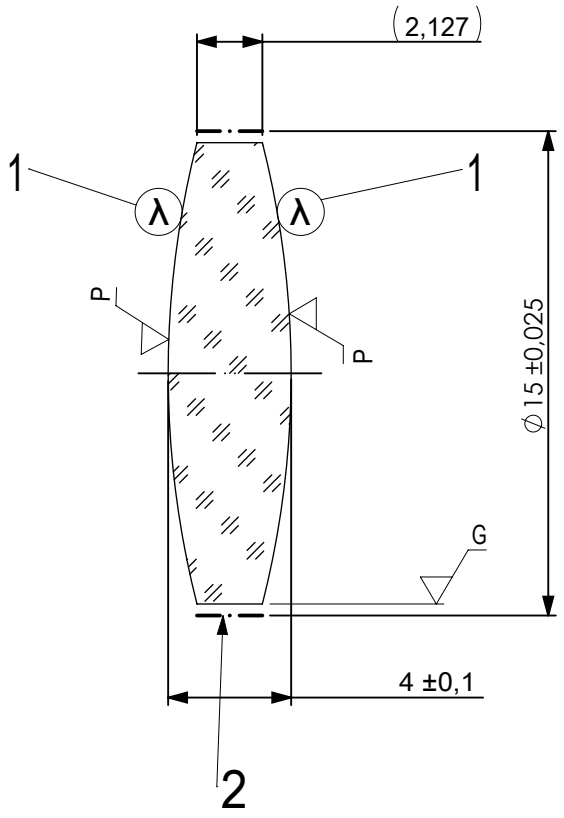

FOCAL LENGTH (EFL): 30 ±0,3

BACK FOCAL LENGTH (BFL): 28,82

1 AR COATING: VIS 0°
R(AVG) ≤ 0,4% FROM 425-675nm @ 0° AOI

2 BLACKENED SURFACE

LEFT SURFACE	MATERIAL	RIGHT SURFACE
R 30,5±0,031 CX	GLASS N-BK7 517/642	R 30,5±0,031 CX
Øe 14		Øe 14
3/ 3 (0,5) λ=632,8 nm		3/ 3 (0,5) λ=632,8 nm
4/ -		4/ 1,93'
5/ 40 - 20 (MIL-PRF-13830B)		5/ 40 - 20 (MIL-PRF-13830B)
6/ -		6/ -

PROTECTIVE CHAMFERS AS NEEDED		FIRST ANGLE PROJECTION	Edmund Optics®
ROHS: COMPLIANT	SCALE: NONE	λ = 587,6nm	
SPECIFICATIONS SUBJECT TO CHANGE WITHOUT NOTICE. DIMENSIONS ARE FOR REFERENCE ONLY			TITLE: 15mm Dia, x 30mm FL, VIS 0 Inked, Double-Convex Lens
FOR INFORMATION ONLY: DO NOT MANUFACTURE PARTS TO THIS DRAWING		ALL DIMS IN: mm	
INDICATIONS IN ACCORDANCE WITH ISO 10110			DWG NO: 47899INK; SHEET SIZE: A4; SHEET 1 OF 1