NOTES:

1. SUBSTRATE: FUSED SILICA

2. COATING (APPLY ACROSS CLEAR APERTURE)

   S1: R(avg) ≤1.5% @ 600 - 1050nm
   S2: R(avg) ≤1.5% @ 600 - 1050nm

3. EDGES: FINE GROUND

4. CENTERING: <3-5 ARCMIN

5. ASPHERE FIGURE ERROR: 0.75µm RMS

6. ASPHERIC SURFACE DESCRIBED BY (REF. COEFFICIENT TABLE)

$$Z_{ASPH}(Y) = \frac{(1/RADIUS)*Y^2}{1+\sqrt{1-(1+k)*(1/RADIUS)^2*Y^2}} + D*Y^2 + E*Y^4 + F*Y^6 + G*Y^8 + H*Y^{10} + J*Y^{12} + L*Y^{14}$$

FOR INFORMATION ONLY:
DO NOT MANUFACTURE PARTS TO THIS DRAWING

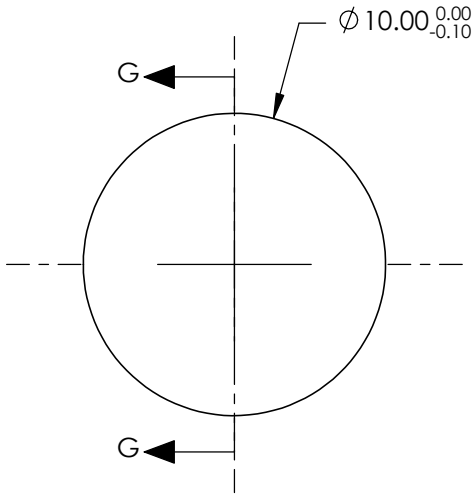

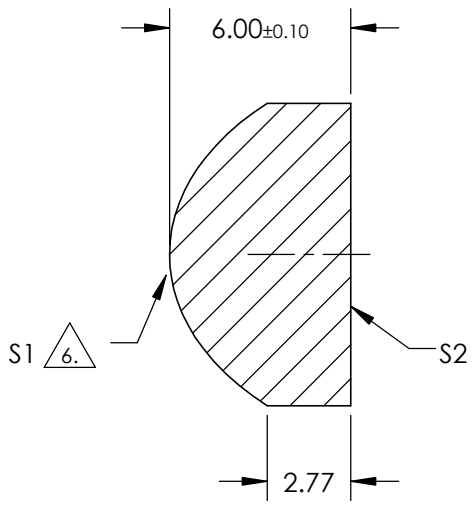

SECTION G-G

COEFFIECIENT TABLE 7

COEFFIECIENT	S1
k	-0.632906
D	0
E	0.00012823215
F	1.5211816e-006
G	3.3940061e-008
H	0
J	0
L	0

SPECIFICATIONS SUBJECT TO CHANGE WITHOUT NOTICE DIMENSIONS ARE FOR REFERENCE ONLY

REV. A	S1	S2
SHAPE	CONVEX	PLANO
RADIUS	4.585	INFINITY
SURFACE QUALITY	60-40	60-40
CLEAR APERTURE	90%	90%
BEVEL MAX	PROTECTIVE AS NEEDED	PROTECTIVE AS NEEDED

EFL @ 587.6nm	10	Edmund Optics®		
BFL @ 587.6nm	5.89			
THIRD ANGLE PROJECTION		TITLE	10mm DIA 0.50 NA NIR COATED, UV FUSED SILICA ASPHERIC LENS	
ALL DIMS IN	mm	DWG NO	87990	SHEET 1 OF 1