FOR INFORMATION ONLY:
DO NOT MANUFACTURE PARTS TO THIS DRAWING

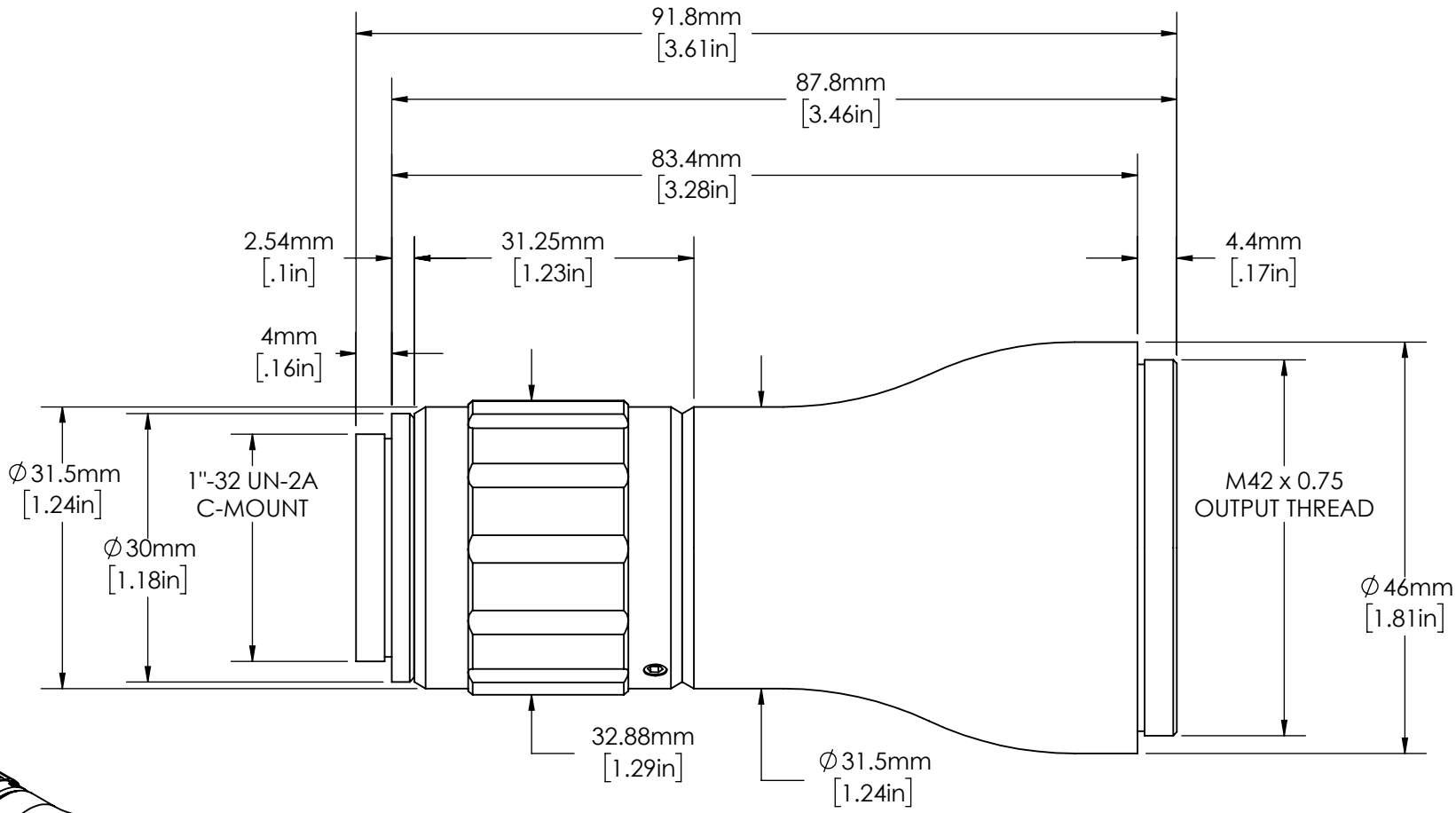

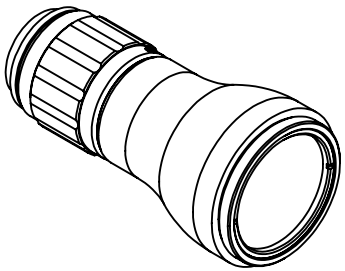

SPECIFICATIONS SUBJECT TO CHANGE WITHOUT NOTICE
DIMENSIONS ARE FOR REFERENCE ONLY
DIMENSIONS ARE IN mm [INCHES]

EXPANSION POWER	3X
DESIGN WAVELENGTH	260 - 365nm
CENTER WAVELENGTH	266 ± 1nm 355 ± 1nm
ENTRANCE BEAM MAX DIAMETER	10.00mm
INPUT APERTURE DIAMETER	11.00mm

Edmund Optics®

TITLE	3X, UV Draconis™ Broadband Beam Expander		
DWG NO	68270	REV	00